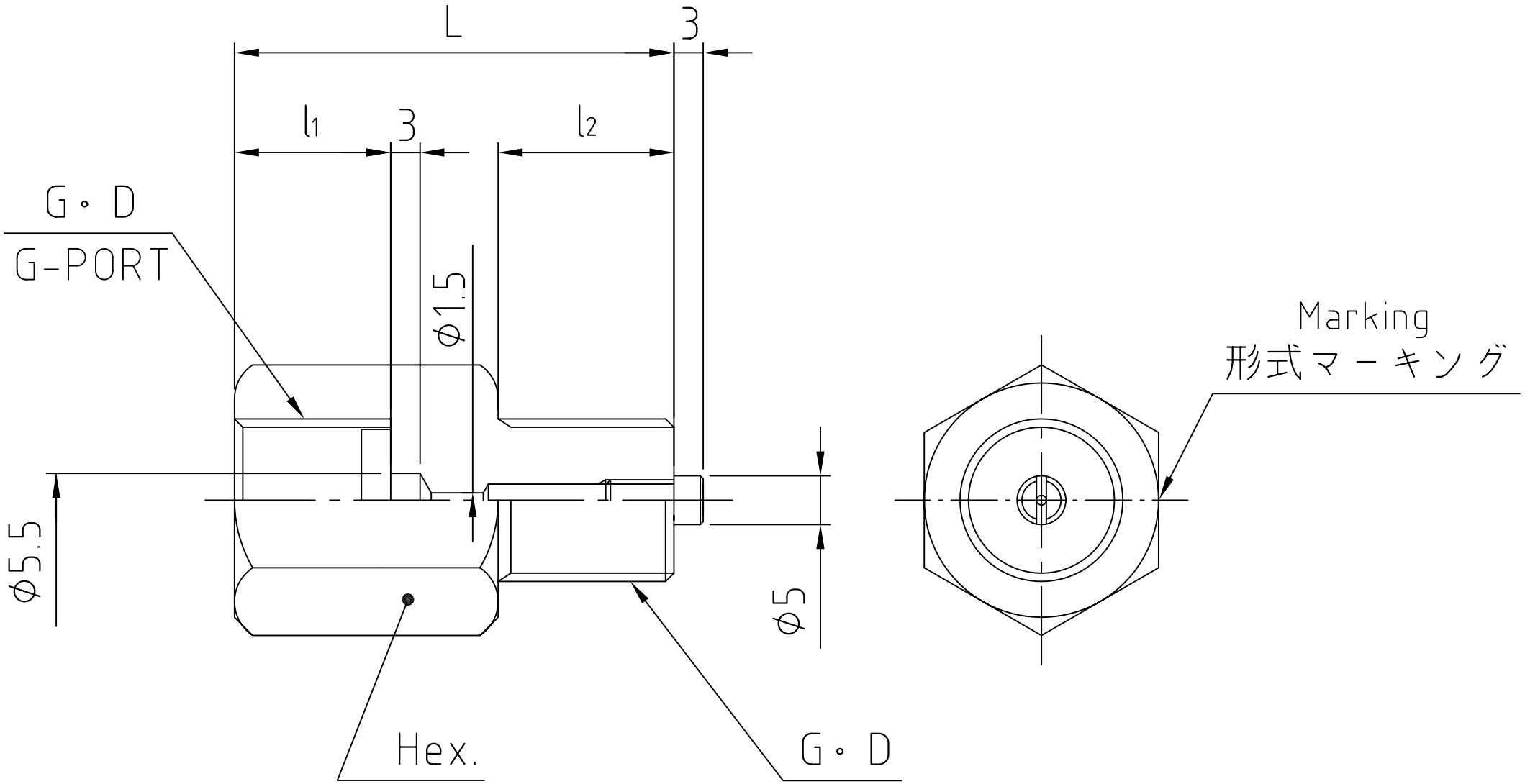

Type 形　式	G・D	l_1	l_2	L	Hex.	Weight 質　量	Material 材　質
SA-100-5	G1/4	14	16	42	19	60g	SUS303
SA-100-6	G3/8	16	18	45	24	100g	